HORSHAM TOWNSHIP
Department of Code Enforcement
1025 Horsham Road ∘ Horsham, PA 19044 ∘ P: (215) 643-3131 ∘ F: (215) 643-0448

ROAD OPENING PERMIT APPLICATION

Date: _____	Permit #: _____	Fee: $_____

Proposed Activity:

☐ Road Opening	☐ Curb/Sidewalk Repair *	☐ Access Drive Opening

* You MUST contact the Highway Department during business hours 24-hrs **PRIOR** to pouring concrete to schedule an inspection for the prepared area. Highway Department phone number: (215) 672-6913

Applicant Name: _____

Applicant Address: _____

_____

Responsible Party Name: _____

Phone Number: _____

24-Hr Emergency Phone #: _____

Owner Name: _____

Work Location: _____

Scope of Work: _____

Start Date: _____

Completion Date: _____

INTERNAL USE ONLY:			
Permit Authorized By:		Date:	
Code Enf. Notified:		Date Permit Mailed:	
Date Final Inspection:		Inspected by:	

04/2014

CONDITIONS OF ROAD OPENING PERMIT APPLICATION APPROVAL

- ☐ Reconstruction of roadway to be in accordance with Horsham Township specifications (copy attached).
- ☐ Horsham Township Highway Department to receive 24-hour notice to schedule inspections of all work.
- ☐ Openings are authorized in accordance with Horsham Township Ordinance #66.
- ☐ Applicant/Responsible party are responsible to notify the Pennsylvania One Call System at (800) 242-1776 and to ensure all utility lines located in the work area are identified prior to commencing work.
- ☐ Certificate of insurance required.
- ☐ Applicant responsible for defects in road restoration for a period of two (2) calendar years from date of Township acceptance of final restoration.

I, _____, (applicant/responsible party) have read the above conditions of Road Opening Permit Application Approval and agree to all terms and conditions. I also agree to any requirements/changes as indicated by the Horsham Township Highway Superintendent prior to commencement of work and upon inspection.

Date Signed: _____

Horsham Township Concrete Checklist for Sidewalk, Curb, and Driveway Apron and Depressions

Final inspections must be scheduled during business hours 24 hours prior to puring concrete.
• After the second failed inspection there will be a $75 fee (must be paid in full prior to re-inspection)
Weekend pours are NOT permitted.
No concrete pours are after 2:00 PM without approval.
No staging or storing of construction materials in the street is permitted without approval
All streets are to be kept clean of all construction debris.
Lighted barricades, reflective cones and caution tape are required around all work areas.
**Please reference Detailed Concrete Specifications and Curb, Sidewalk, Apron details.*

Closed Permit Requirements

- [ ] PA One Calls are required before construction begins. (1-800-242-1776)
- [ ] Concrete to be used is PA DOT Class A (4,000 psi a e).
- [ ] All Concrete to be sealed with Aquron CPT 2000 as per detail.
- [ ] Copies of material ticket are to be supplied to the inspector.
- [ ] Final inspection at the time of pouring.

Curb Work

- [ ] 4 inches of 2B stone to be placed under curb and compacted with vibrator
- [ ] Best quality steel or wood forms are to be used
- [ ] Control Joints are to be placed every 10ft.
- [ ] Curb shall be dowel pinned into inlets. Two #6 rebars centered vertically.
- [ ] Depression Curb shall have Two #6 rebars placed per detail. (At least 8 to 18 inches on either side.)
- [ ] 18 inches to 2 foot saw cut minimum in roadway to allow for compaction
- [ ] Backfill: 6" compacted 2A modified stone, 4" of 19mm base course, 2" 9.5mm superpave wearing course.
- [ ] 3/4" Expansion material to be placed every 50 feet full depth. It shall be placed between the depressed curb and the apron unless a monolithic pour takes place.

Sidewalk Work

- [ ] 4 inches 2B stone to be placed and compacted under sidewalk with a vibrator compater.
- [ ] 4 inches of sidewalk is required.
- [ ] 1/2" Expansion material to be placed every 30 feet and transitions from 4" to 6" (driveway aprons)
- [ ] 1/2" Expansion material to be placed where existing pavment or sidewalk meets proposed sidewalk.
- [ ] 1/8" wide x 1" deep transverse dummy joint placed every 4 feet.
- [ ] Non-slip surface texture shall be broomed transverse to the slope of the sidewalk.

Apron Work

- [ ] 6 inches of 2B stone to be placed under apron and apron sidewalk and compacted with vibrator
- [ ] 6 inches of Class "A" concrete is required
- [ ] 2 layers of WWF 6x6 W2xW2 to be placed in the apron and apron sidewalk
- [ ] Monolithic pour: 1/8" wide x 1" deep transverse dummy joint placed between sidewalk and apron

Contractor Name: _____ Permit Number: _____

Signature: _____ Date: _____

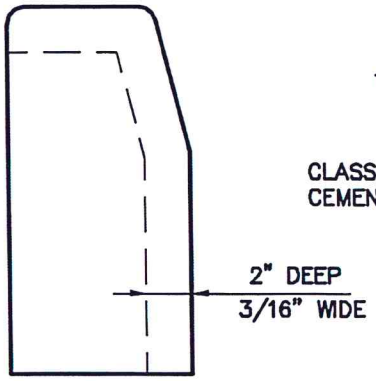

DETAIL A
CONTRACTION JOINT

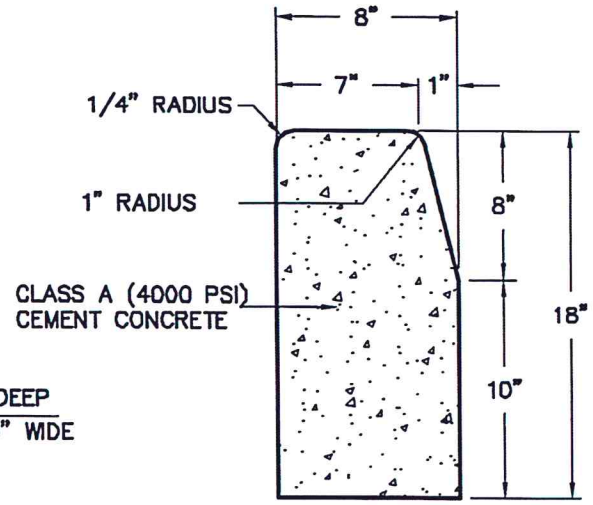

TYPICAL
CROSS SECTION

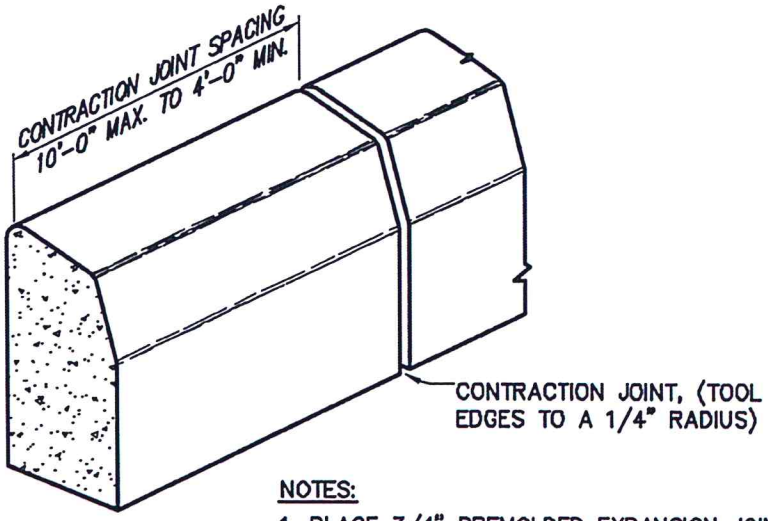

NOTES:

1. PLACE 3/4" PREMOLDED EXPANSION JOINT MATERIAL EVERY 50 FEET (MAX) AND AT ALL DRIVEWAYS (DEPRESSED CURB CUTS), INLETS AND CURB RADII
2. DOWEL PIN CURB WHERE CURB ABUTS INLET HOODS

CONCRETE CURB DETAIL

HORSHAM TOWNSHIP, MONTGOMERY COUNTY, PENNSYLVANIA

GILMORE & ASSOCIATES, INC.
ENGINEERING & CONSULTING SERVICES
65 EAST BUTLER AVENUE NEW BRITAIN, PA 18901-5106 • (215) 345-4330 •
www.gilmore-assoc.com

DATE:	LAST REVISED:	DRAWING No:
5/07/2014	–	10

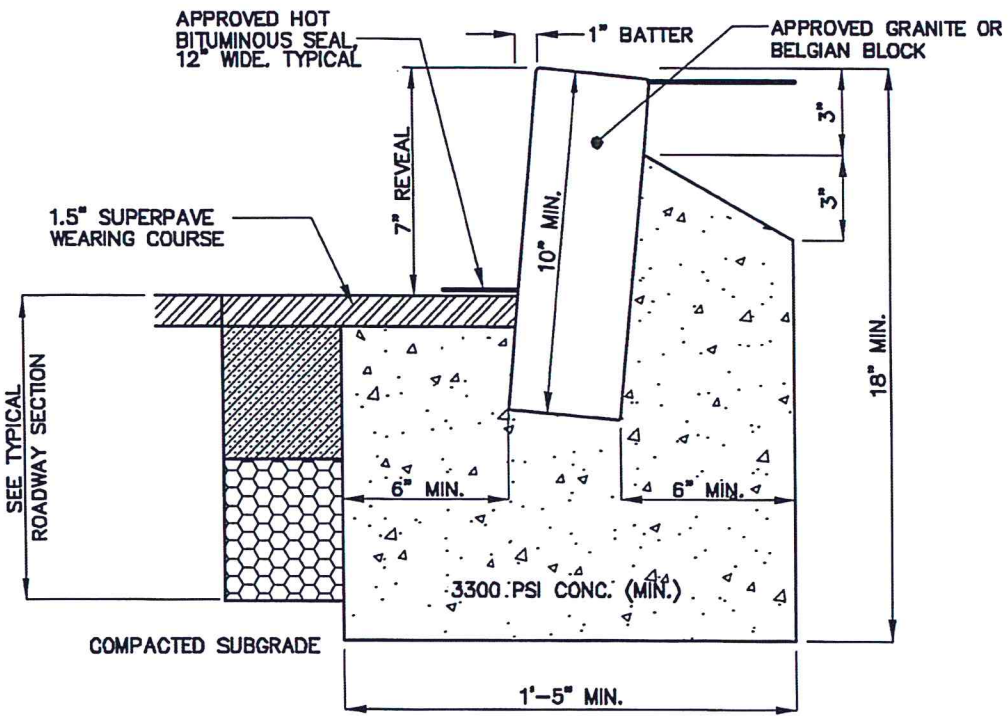

SECTION VIEW

NOTES:
1. TO BE USED ONLY WHERE APPROVED BY TOWNSHIP COUNCIL
2. JOINTS NOT TO EXCEED 1/2" IN WIDTH.
3. EXPANSION JOINTS EVERY 50', AT THE P.C. AND P.T. OF CURVES AND AT DRIVEWAY DEPRESSIONS.
4. 10" BLOCK MAY BE USED IN CURB DEPRESSIONS.

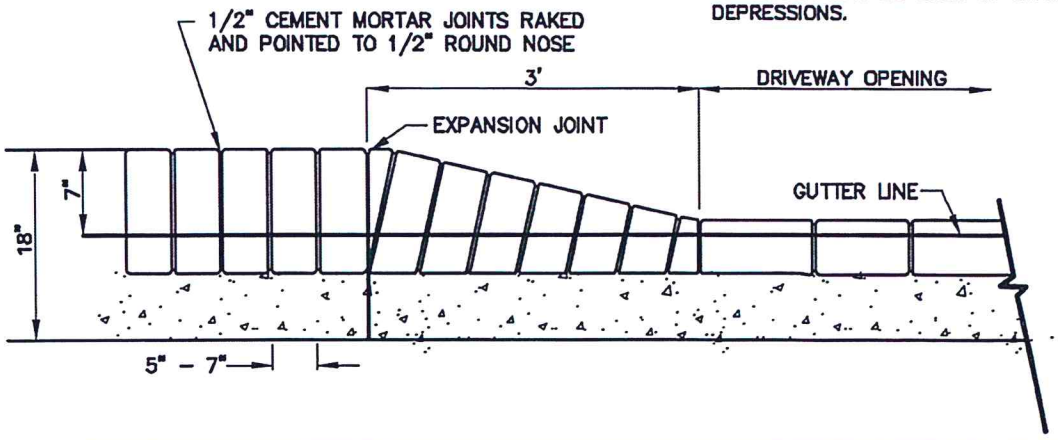

BELGIAN BLOCK CURB DETAIL

HORSHAM TOWNSHIP, MONTGOMERY COUNTY, PENNSYLVANIA

GILMORE & ASSOCIATES, INC.
ENGINEERING & CONSULTING SERVICES
65 EAST BUTLER AVENUE NEW BRITAIN, PA 18901-5106 • (215) 345-4330 •
www.gilmore-assoc.com

DATE:	LAST REVISED:	DRAWING No:
5/07/2014	–	11

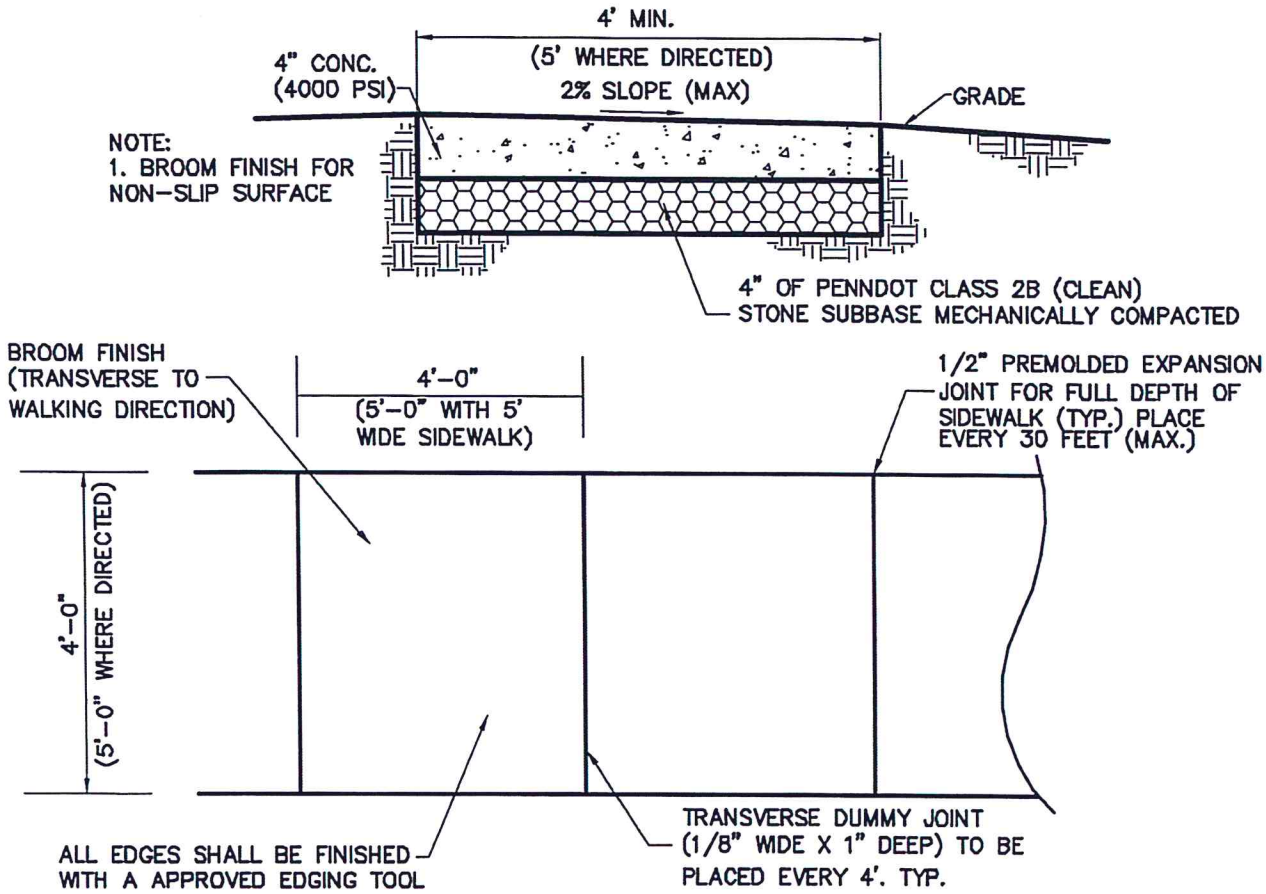

① $\frac{1}{2}$" PREMOLDED EXPANSION JOINTS TO BE PLACED EVERY 24 FEET OR 25 FEET (MAX.) WHERE SIDEWALKS ARE REQUIRED TO BE 5 FEET WIDE. AND AT ALL LOCATIONS WHERE EXISTING PAVEMENT OR SIDEWALK MEETS PROPOSED SIDEWALK, WHERE SIDEWALK ABUTS CURB OR OTHER SIMILAR STRUCTURES, AND WHERE SIDEWALK TRANSITIONS FROM 4" THICK TO 6" THICK (DRIVEWAY APRONS, ETC.)

② WITH ALL PROPOSED SIDEWALK, A NON-SLIP SURFACE TEXTURE SHALL BE BROOMED TRANSVERSE TO THE SLOPE OF THE SIDEWALK.

TYPICAL SIDEWALK DETAIL

HORSHAM TOWNSHIP, MONTGOMERY COUNTY, PENNSYLVANIA

GILMORE & ASSOCIATES, INC.
ENGINEERING & CONSULTING SERVICES
65 EAST BUTLER AVENUE NEW BRITAIN, PA 18901-5106 • (215) 345-4330 •
www.gilmore-assoc.com

DATE:	LAST REVISED:	DRAWING No:
5/07/2014	–	12

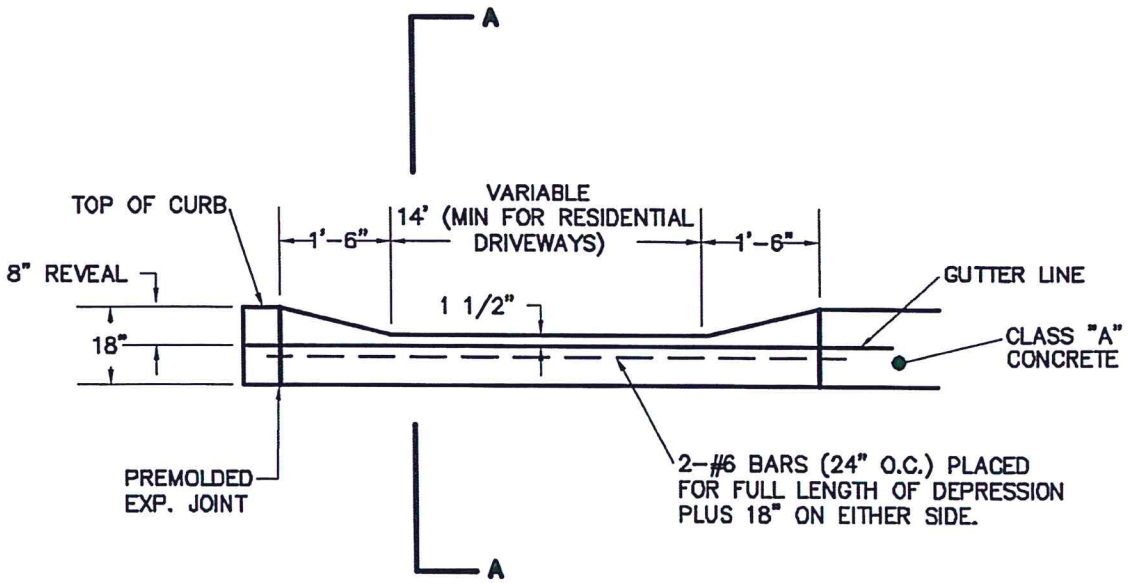

SECTION A

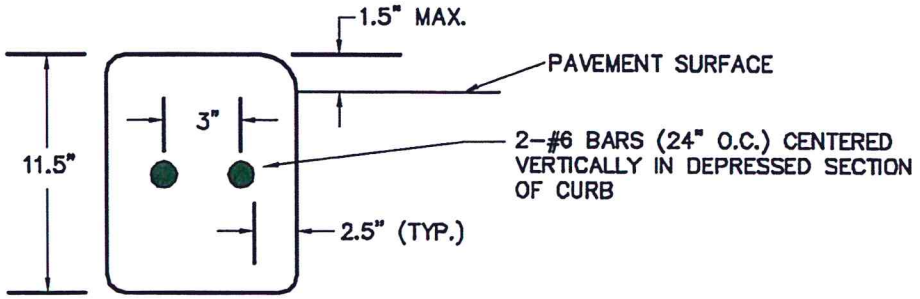

DEPRESSED CURB

HORSHAM TOWNSHIP, MONTGOMERY COUNTY, PENNSYLVANIA

GILMORE & ASSOCIATES, INC.
ENGINEERING & CONSULTING SERVICES
65 EAST BUTLER AVENUE NEW BRITAIN, PA 18901-5106 • (215) 345-4330 •
www.gilmore-assoc.com

DATE:	LAST REVISED:	DRAWING No:
5/07/2014	–	13

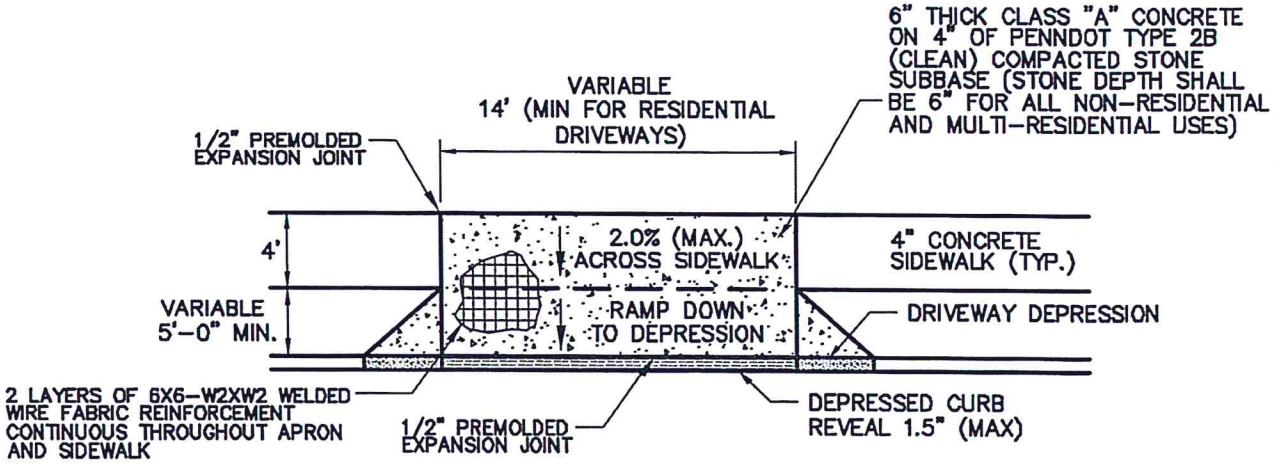

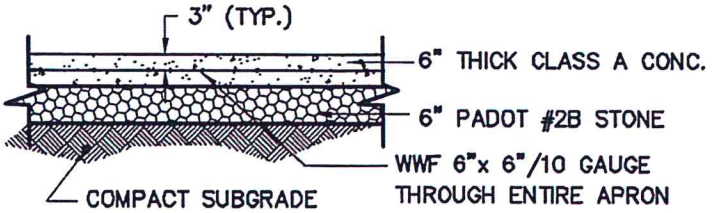

DRIVEWAY APRON DETAIL

HORSHAM TOWNSHIP, MONTGOMERY COUNTY, PENNSYLVANIA

GILMORE & ASSOCIATES, INC.
ENGINEERING & CONSULTING SERVICES
65 EAST BUTLER AVENUE NEW BRITAIN, PA 18901-5106 • (215) 345-4330 •
www.gilmore-assoc.com

DATE:	LAST REVISED:	DRAWING No:
5/07/2014	–	14

HORSHAM TOWNSHIPS DETAILED CONCRETE SPECIFICATIONS

GENERAL – Plain cement concrete sidewalk shall be constructed in accordance with the Pennsylvania Department of Transportation Form 408 Specifications, Section 676, except where superseded by the following:

Where sidewalks exist, the existing base shall remain. Those areas of the base disturbed by the contractor during removal of the existing sidewalk shall be repaired and compacted at the contractor's expense.

All Road Opening Permits (ROP) need to be issued and filed prior to the commencement of work. The execution of the ROP indicates that you have read and understand the terms listed below.

Contractor must establish and inspection time prior to the pouring of concrete by calling the Public Works Department during business hours at least 24 hours in advance. Please call the office at 215-672-6913 to make an appointment.

CONCRETE – Concrete to be used shall be PA DOT Class A (4000 PSI) from a certified central mix plant. The Township Engineer or his duly authorized representative must approve variations from this specification. Copies of material tickets are to be supplied to the inspector at time of inspection.

LINES AND GRADES – Where curb and/or sidewalk is non-existing, line and grade is to be obtained from the Township Engineer or his duly authorized representative.

DIMENSIONS – Curb shall not be less than 18" in depth, 7" wide on top and battered on the front face to a width of 8" at the bottom. The rear face shall be vertical. The top surface of the curb shall be finished with a slope of ¼" per foot toward the front face, and the edge where the front face meets the top shall be finished to a radius of 1". The edge where the rear face meets the top shall be finished to a radius of ¼".

Sidewalk shall be 4" thick in walkway areas, 6" thick across all driveways, and shall be replaced in existing width. Handicap curb cuts shall be 6" thick.

FORMS – Forms shall be of best quality steel or wood, free from warp or defects of any kind. Forms, which have become warped, bent or broken, shall not be used. Wood forms shall be made of 2" thick lumber, uniformly 4" wide for walkways and 6" wide for driveways. The inside of forms shall be coated with non-staining mineral oil or water before concrete is poured. Forms shall not be removed less than 12 hours after a pour is made.

PLACING CONCRETE AND FINISHING – The foundation shall be formed at the required depth below the grade. All soft, spongy or other suitable materials shall be removed from the sub grade, and the foundation shall be thoroughly compacted and finished to a firm uniform surface.

Concrete shall be finished to present a semi-smooth surface as obtained by the use of a wooden float or a light broom finish. All corners formed by the intersection of the vertical side with the horizontal surface of the walk shall be rounded to have a radius of ¼", including the surface at the joints.

CONTINUED ON BACK

EXPANSION JOINTS

Sidewalk – ½" Expansion joints shall be made every 4 feet (30ft max) - joint to be filled with a prepared bitumen and fiber expansion joint of approved quality meeting PADOT Specifications Publication 408, Section 705, for fiber joint filler. All joints shall be cut entirely through the block and shall be at right angles to the line of the walk and perpendicular to the surface. In driveway areas, the width of the 6" slab shall be divided equally unless a monolithic pour is used.

Curb - ¾" Expansion joints shall be every 50 feet full depth in curbing. Contraction Joints (4ft Min – 10ft Max)

CURING AND PROTECTION – Concrete shall be protected from weather and trespassers for a period of at least 72 hours after final set and shall be kept covered with wet burlap, sisal-craft paper or equal, curing compound, or other approved methods for that period.

REMOVAL OF FORMS – Do not remove side forms until at least 12 hours after placing concrete. After removal of forms, fill minor honeycombed areas with mortar. As directed, remove and replace defective major honeycombed areas.

SEALING/CURING - Aquron 2000 sealing/curing or approved equal must be placed as soon as forms are removed. If for some reason forms are not removed, sealing/curing must be placed as soon as concrete finishing is completed. The Township Representative must be notified prior to and be on site at the time sealing/curing is completed.

BACKFILLING – After the concrete has cured for at least 72 hours, the area adjacent to the sidewalk or curb shall be backfilled with acceptable materials and thoroughly compacted. All existing lawn and grass areas disturbed by the contractor shall be restored to its original condition.

Restoration of disturbed roadway shall be the responsibility of the contractor and shall conform to PADOT Specifications Publication 408: the opening shall be backfilled, compacted with 6" 2A-modified stone, 4" of ID-2 base course and 2" ID-2A wearing course. Both base and wearing courses shall be Type H Aggregate. Tack coat shall be applied to all vertical surfaces of existing curb and bituminous surfaces. Sealer shall be applied at curb line and at the joint between the existing and new paving.

APPROVED TYPE LIGHTED BARRICADES – Barricades shall be used to protect vehicular and pedestrian public from injury at all times until the forms are removed and backfilling is completed.

AMERICAN DISABILITIES ACT REQUIREMENT – Existing curbs at street corners shall be replaced with Handicapped Curb Cuts (ramps) in accordance with the ADA specifications whenever and wherever curb and/or sidewalk replacement at a corner is undertaken. ADA specifications are available from the Township upon request.